1888894 K-Blue Twin Locker Bed
1888881 K-Red Twin Locker Bed

Parts and Hardware List

A.	Headboard	1 pc
B.	Footboard	1 pc
C.	Side Rails	2 pcs
D.	Metal Mattress Support	1 pc
E.	Short Allen Head Bolts	8 pcs
F.	Long Allen Head Bolts	6 pcs
G.	Large Flat Washers	8 pcs
H.	Small Flat Washers	6 pcs
I.	Large Allen Head Wrench	1 pc
J.	Small Allen Head Wrench	1 pc

∗ Please make sure that you have all the parts and hardware indicated above before you begin assembly of this item.
∗ Use the hardware illustrations to determine correct piece and size.
∗ This item should be assembled on a soft surface to prevent scratching the finish during assembly.
* This item is to be assembled by an adult and is not intended to be taken apart by a child.

Hardware Illustrations

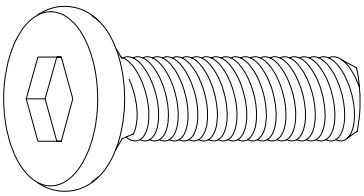

E. Short Allen Head Bolt

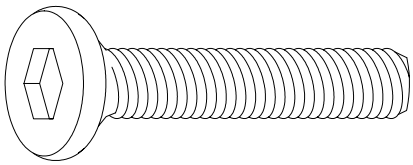

F. Long Allen Head Bolt

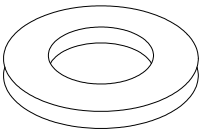

G. Large Flat Washer

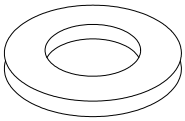

H. Small Flat Washer

1888894 K-Blue Twin Locker Bed
1888881 K-Red Twin Locker Bed

Attach Side Rails to the Headboard & Footboard

Parts required

A.	Headboard	1 pc	E.	Short Allen Head Bolts	8 pcs
B.	Footboard	1 pc	G.	Large Flat Washers	8 pcs
C.	Side Rails	2 pcs	I.	Large Allen Head Wrench	1 pc

1. **Attach Side Rails (C)** Align the pre-drilled holes in the metal brackets of the Side Rails (C) with the pre-threaded holes in the posts of Headboard (A). Make sure the small square tube attached to the Side Rails (C) is facing the inside of the bed. Secure, but do not fully tighten with Short Allen Head Bolts (E) and Large Flat Washers (G) using the Large Allen Head Wrench (I). See Illustration #1.
2. Repeat step 1 to secure the Side Rails (C) to the Footboard (B). See Illustration #1.

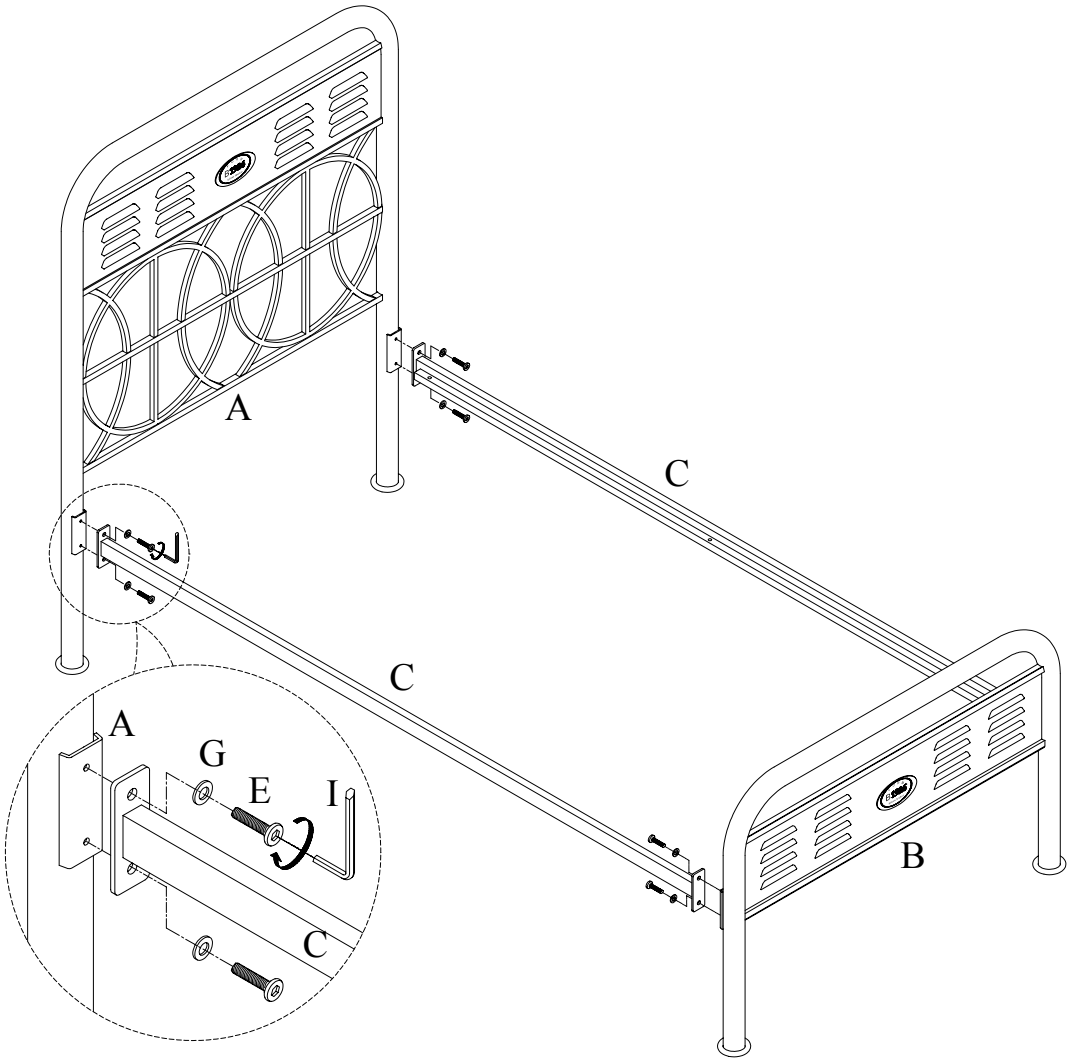

Illustration # 1

1888894 K-Blue Twin Locker Bed
1888881 K-Red Twin Locker Bed

Attach Metal Mattress Support to Side Rails

Parts required

C.	Side Rails	2 pcs	H.	Small Flat Washers	6 pcs
D.	Metal Mattress Support	1 pc	J.	Small Allen Head Wrench	1 pc
F.	Long Allen Head Bolts	6 pcs			

3. **Attach Metal Mattress Support (D)** Adjust and align the pre-threaded holes in the frame of Metal Mattress Support (D) with the pre-drilled holes in the Side Rails (C). Insert the Long Allen Head Bolts (F) with Small Flat Washers (H) through the pre-drilled holes in the Side Rails (C) into the pre-threaded holes in the frame of Metal Mattress (D). Secure, but do not fully tighten, with Small Allen Head Wrench (J). See Illustration #2.
4. **Adjust and tighten all bolts at this time.**

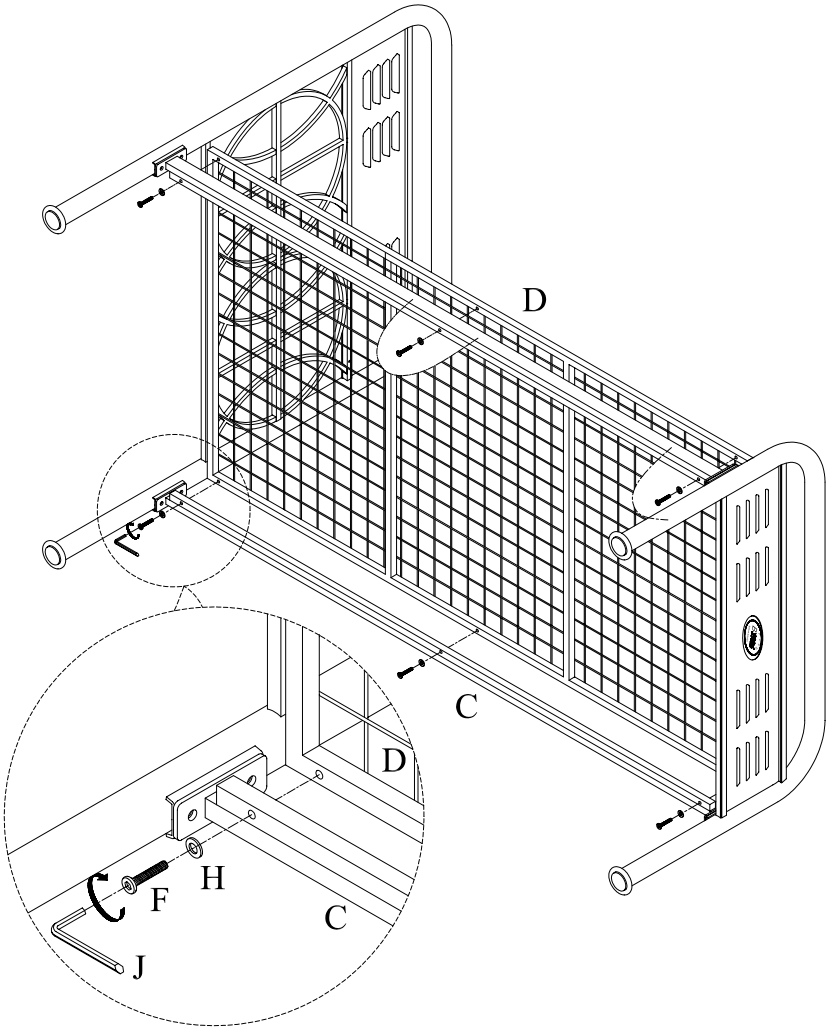

Illustration #2